FRIIA LITE CS

Sleek, stylish cold/sparkling water system for lower-volume sites, such as a small office.

- 12 litres per hour
- Internal or external CO_2
- In-built water filter
- Two font heights available

COMPLETE BUNDLE ORDER CODE

FRIIA Lite CS	5000206
FRIIA Lite CS Tall	5000207

2B FONT
1000868

2B FONT TALL
1000869

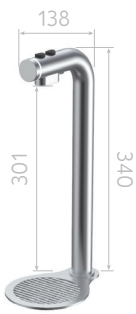

LITE CHILLER/ CARBONATOR
1000202

SYSTEM SET-UP

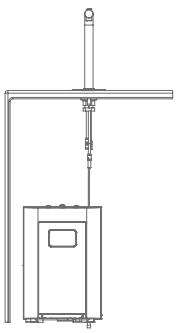

CHILLER/CARBONATOR SPECS

PRODUCT INFO	SIZE	PERFORMANCE SPECS		PLUMBING, ELECTRICAL AND TECHNICAL SPECS			
NAME ORDER CODE	DIMENSIONS (D X W X H mm)	L/HR	CUPS /HR	POWER	PLUMBING REQS	COMPRESSOR POWER	REFRIGERANT
FRIIA Lite Chiller/Carbonator 1000202	468 x 279 x 420	12L/hr based on incoming water temp of 15°C and output water temp of 5-7°	60	230V	3/4" BSPM Working Water Pressure: 1 Bar (14.5psi) to 4 Bar (58psi)	129W	R600a/35g

A minimum operating pressure of 2 bar or 28 psi downstream of filter is required for optimum output l/min.

FONT SPECS

NAME ORDER CODE	DIMENSIONS INCL. DRIP TRAY (D X W X H mm)	DIMENSIONS EXCL. DRIP TRAY (D X W X H mm)	TAP TO COUNTER (mm)
2b Font 1000868	168 x 120 x 286	138 x 30 x 286	247
2b Font Tall 1000869	168 x 120 x 340	138 x 30 x 340	301

PACKAGING

NAME	PACKAGING DIMENSIONS (L X W X H mm)	WEIGHT
Font	290 x 570 x 215	2kg
Chiller/Carbonator	590 x 385 x 520	21.2kg

PLEASE NOTE

FRIIA Lite components (font and chiller) are packed and shipped in individual boxes. FRIIA Lite Sparkling variants require either an internal CO_2 canister (we recommend SodaStream 60L) or an external food grade CO_2 with regulator.

For more information visit **www.marcobeveragesystems.com**

ACCESSORIES & MAINTENANCE

CO_2 SPECS

FRIIA Lite can be used with an internal or external CO_2 canister.

A compatible gas cylinder is the **SodaStream 60L** cylinder.

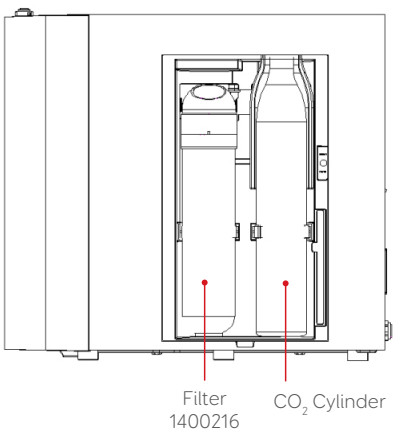

FILTER SPECS

NAME ORDER CODE	FLOW RATE	WORKING PRESSURE	TEMPERATURE	MAX PURIFIED WATER CAPACITY	PH RANGE	APPLICABLE INLET WATER
PAC Sediment & Carbon Cold Water Filter 1400216	3L/min	0.1-0.4MPa	4-38°C	3600L or 6 months	5-10	TDS below 350 ppm

SANITISATION ACCESSORIES

Internal Water Cooler Sanitising Solution 1L	8800125
Scaleclean 1kg Descaler (5 uses)	8000260
Scaleclean 200g Descaler (1 use)	8000270

For use with External BWT Filter	
Sanitisation Kit: Internal Water Cooler Sanitising Solution 1L	8000900
Chiller Best Service Cartridge	8000522

For use with Internal PAC Filter	
FRIIA Lite Sanitising Kit	8000889
Contains: FRIIA Lite Filter Blank	8000888
Instruction Booklet for the FRIIA Lite Sanitisation Kit	1900961
Syringe 100ml	1699995

RADIUS OF MAXIMUM FONT PLACEMENT

Standard 800mm high cabinet

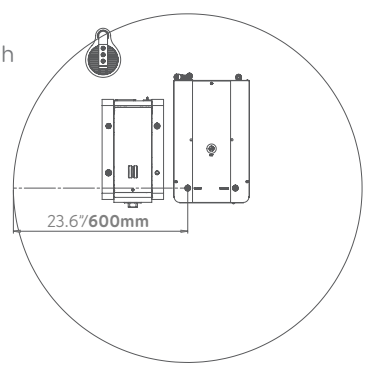

CABINET

Min: 800mm (h) x 600mm (w) x 600mm (d) with 100mm clearance around machines all sides

FRIIA LITE MAINTENANCE

- Wipe down font daily with non-abrasive cleaner.
- Sanitise the system every 6 months, after a filter change or after a period of inactivity (more than 72 hours).

INSTALLATION & COUNTER CLEARANCE GUIDES

COUNTER CUT-OUT WITH DRIP TRAY

FRIIA LITE CS 5000206
FRIIA LITE CS TALL 5000207

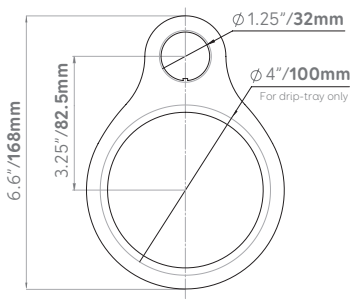

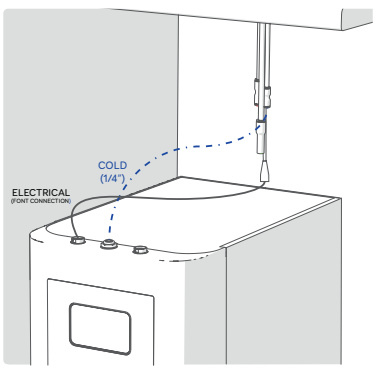

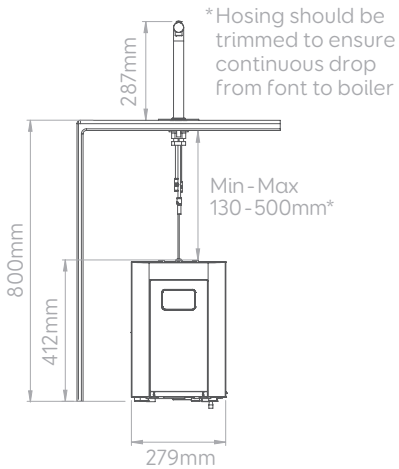

VENTILATION REQUIREMENTS

FRONT VENTILATION: Ventilation grilles cut out of standard cabinet door.

SIDE VENTILATION: Ventilation grilles cut out of standard 600mm cabinet. Grilles may be fitted on either side as long as they ventilate into an open unobstructed area.

BASE VENTILATION: Ventilation grilles cut in base panel and base plinth, a grille must also be cut out at the top of the cabinet.

- At least 2 x vents 260mm/10.2" w x 65mm/2.5 h

UNPACKING INSTRUCTIONS

- The chiller must be handled only in a vertical position. Transporting the appliance in a horizontal position can cause severe damage to the refrigerator.
- Remove the exterior and interior packing. Packing materials (especially any plastic bags) should be stored out of the reach of children, as a potential source of danger. When disposing packaging parts, please follow current regulations on the matter, separating carton from plastic parts.
- Always check that the equipment that is delivered corresponds to the model indicated in the accompanying document.
- The equipment is shipped in a cardboard box. Once the packaging has been removed, check the equipment has not been damaged in transit; if damage is found, notify the carrier.

ELECTRICAL INSTALLATION PROCEDURE

When installing the machine, always observe the local regulations and standards. The appliance is supplied with a moulded power cord. A suitable mains power supply socket should be available within easy access of the appliance so that it can be disconnected easily after install.

The standard machines are supplied with a UK 3-pin plug. For EU models a 2-pin CEE-7 plug will be supplied. US models will be supplied with the suitable plug. A suitable mains power supply socket should be available within easy access of the appliance so that it can be disconnected easily after install. The wires from the font are terminated in a Mini Fit connector which will plug into a similar Mini Fit connector mounted on the top lid of the undercounter boiler.

PLUMBING INSTALLATION PROCEDURE

- Ensure that the equipment is installed according to local plumbing & water regulations.
- Fit a stop valve on a cold water line and attach a 3/4" BSP male fitting, (eg. 3/4" x 1/2" 311 or washing machine type stop valve). Suitable fittings are supplied with the kit to attach to the 3/4" BSP fitting to connect the supplied 3/8" hose.
- Connect water supply lines following the installation drawings, as per installation guide (starting page 14).
- In case filter systems are used verify that they satisfy the requirements of the legislation in force.
- If the filter is new, turn on water and flush at least 10 litres (2.5 gallon) through the filter before to connect it to the cooler; if the filter is a used one, connect water inlet to the chiller.
- To ensure that the maximum value of pressure of 3 Bar is not exceeded the chiller integrates a pressure reducer.
- Turn on the water to flush any impurities, dust etc from the inlet hose and water pipe. Allow several litres through. Especially for new installations.

BEFORE USING CHILLER

- Before connecting the chiller to the power source, let it stand upright for approximately 2-3 hours, this will reduce the possibility of a malfunction.
- Check that all installation procedures have been carried out.
- Ensure water inlet is open.
- Ensure CO_2 valve is full stop.
- Before supplying power to the chiller check water and CO_2 lines do not leak.
- Plug the chiller into a suitable socket and turn the Cooling Switch on the rear of the chiller to the ON position.
- When the unit is on, the carbonation pump starts to fill. The carbonation device stops when it reaches the maximum level.
- If using an external CO_2 Cylinder, on the pressure reducer knob, adjust CO_2 pressure to a value between 50 and 65 PSI (350 and 450 kPa) (3.5 - 4.5 bar).This value depends on the temperature of the water and on the ambient temperature. The temperatures correspond to the CO_2 pressure.
- The chiller will take aproximatly 70-120 minutes to get down to temperature depending on the temperature of your incoming water. The blue light on the front of the chiller remains flashing during chilling.
- Once the blue light stops flashing and remains solid the chiller is down to temperature and at this point you can dispense water.
- To enable the filling of lines, push the font buttons in the following order: sparkling water, cold water & hot water until the flows appear.
- At this point you can dispense water.

CO_2 INSTALLATION & VENTILATION REQUIREMENTS

There are two CO_2 install options with this chiller, either an inbuilt 360-410gr/60L gas cylinder or an external CO_2 cylinder.

INTERNAL GAS CYLINDER

- Open the side door.
- Install the CO_2 cylinder into the machine.
- A compatible gas cylinder to use is the Sodastream 60L cylinder: **sodastream.co.uk/pages/co2-gas-cylinders**

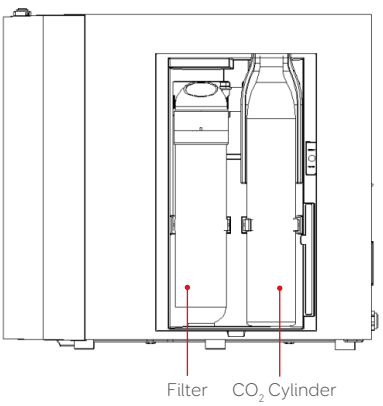

EXTERNAL GAS CYLINDER

- The machine has an external gas connection for 8mm hose (not provided) in the rear; you must supply appropriate pressure gas (0.4MPa). Only use super-dry, food grade CO_2.
- Before connecting the pressure reducer to the gas cylinder, always vent any dirt from the valve. Close the cylinder valve after few seconds.

GAS CYLINDER LOCATION

To prevent the risk of injury or damage the CO_2 cylinder must always be kept in a vertical position against a wall, held in place by a chain and fixed to a bracket. Do not expose the bottle to heat sources or very low temperatures.

PRESSURE REDUCERS

- There are different type of CO_2 cylinder available. Always use a pressure reducer suitable for the type of valve on the cylinder. If you use CO_2, especially in a small area, ventilate the contaminated area at once.
- We advise using a Dual gauge CO_2 regulator, Marco part number 1400195.
- Check for leaks using a solution of soapy water.

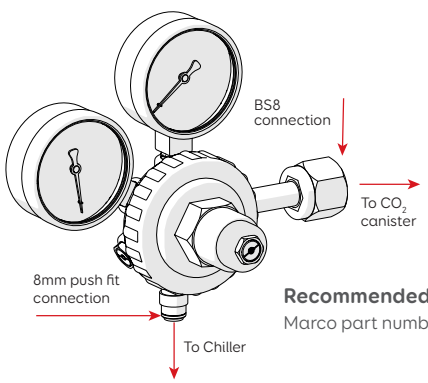

Recommended CO_2 Regulator
Marco part number 1400195

VENTILATION REQUIREMENTS

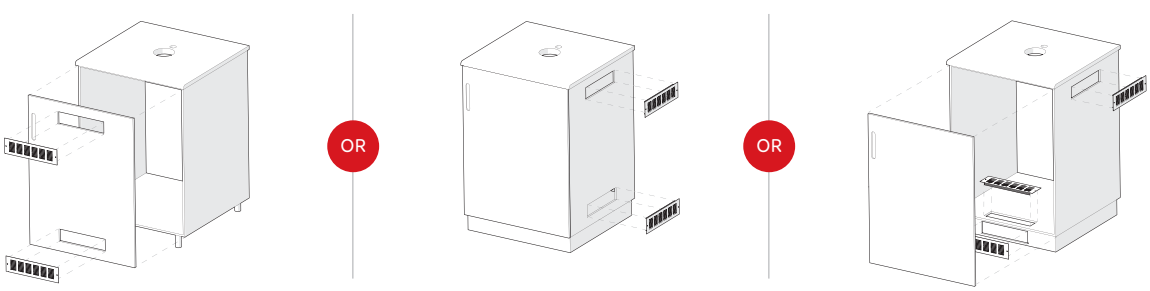

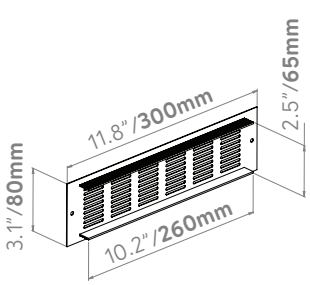

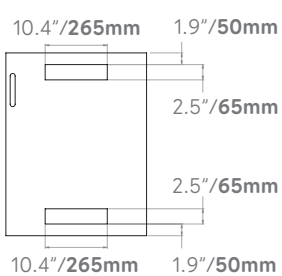

PLEASE NOTE:
It is essential to allow for two ventilation points when installing FRIIA Lite. Vents are not supplied. Where possible, we recommend removing the back of your cabinet.